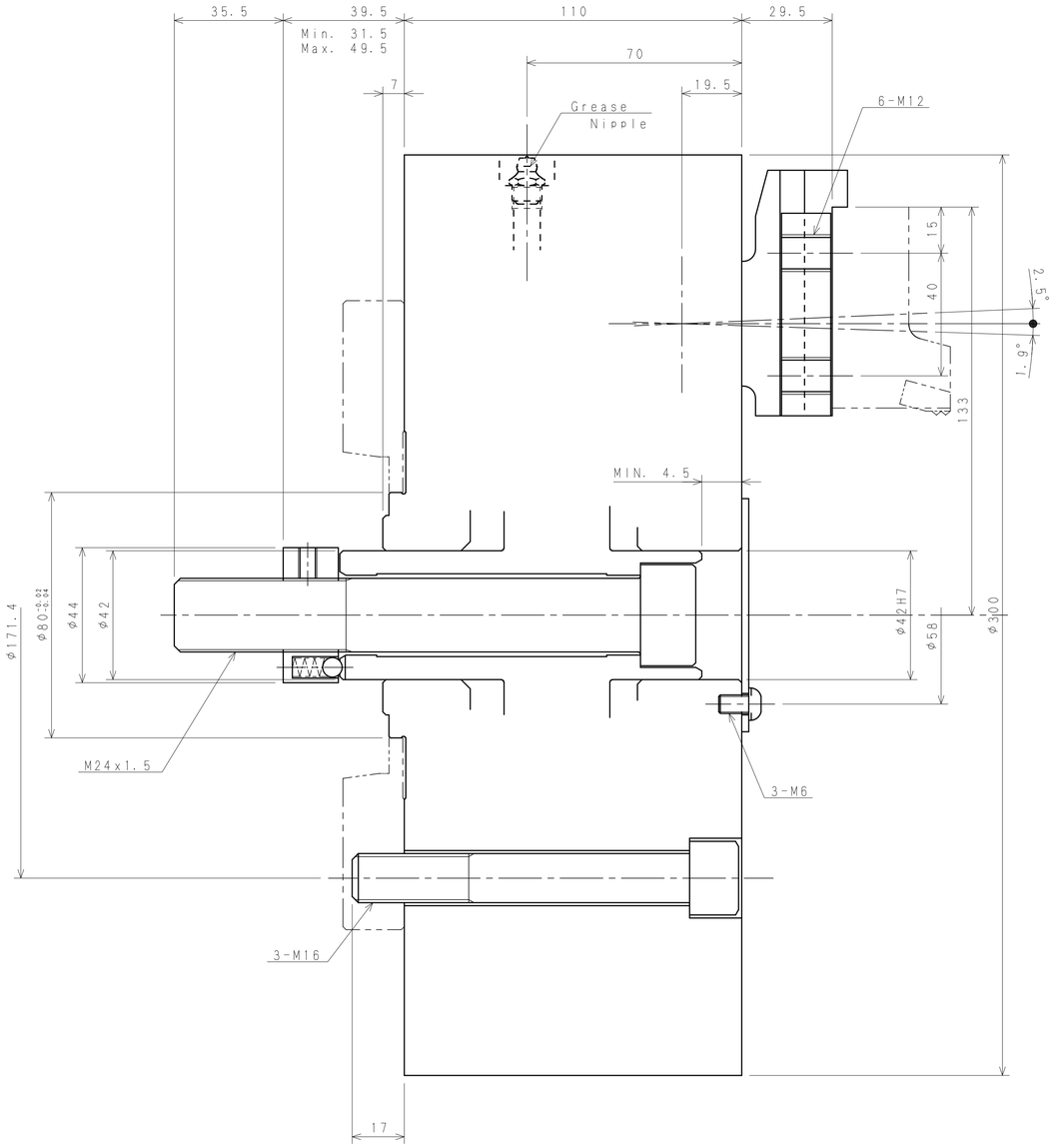

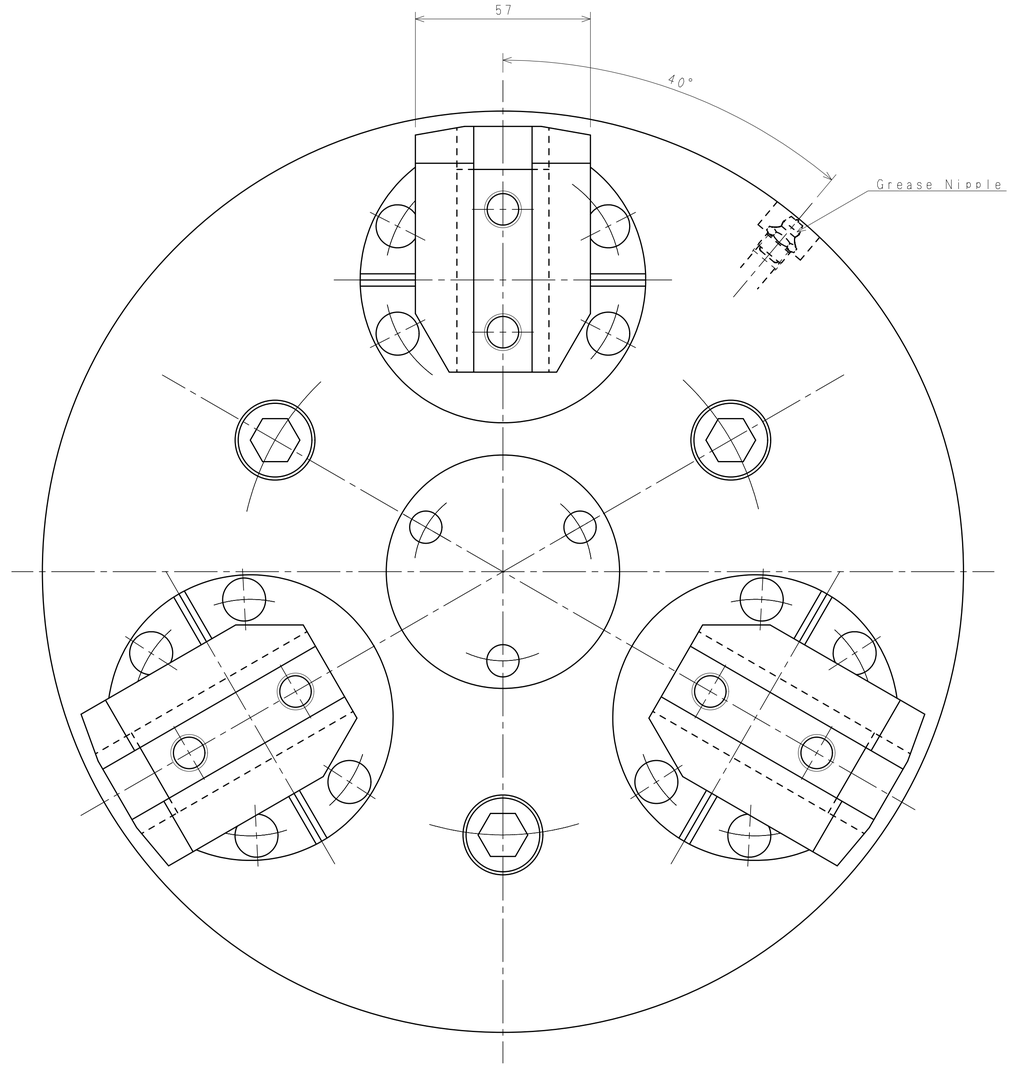

SPECIFICATIONS		DESCRIPTION		REMARKS
Model	CB12	1. BODY	1set	1. OPTION : Top Jaw & Locator
Jaw Stroke(Dia.)	12.8 mm			2. CB12 chuck equipped two holes for air & coolant is available as option.
Plunger Stroke	18.5 mm			3. Adaptor for A-type spindle nose is available as option
Chucking Range(Max.)	246 mm			4. Re-assemble of master jaw is required ID chucking.
Chucking Range(Min.)	63 mm			
Max. Input	30.6 kN			
Max. Static Gripping Force	89.3 kN			
Max. Speed	2,500 min^{-1}			
GD^2	2.61kgf·m^2			
Net Weight	58 kg			

MACHINING TOLERANCE (mm)	DIMENSIONS	SIZE TOLERANCE	I.D./O.D. TOLERANCE	DIMENSIONS	SIZE TOLERANCE	I.D./O.D. TOLERANCE
0.5~3	0.5~3	±0.1	±0.05	30~315	±0.3	±0.15
3~6	3~6	±0.2	±0.1	120~315	±0.5	±0.2
6~30	6~30	±0.2	±0.1	315~1200	±0.8	±0.3

HOLE PITCH
PITCH DIVERGENCE
TOLERANCE
FROM TARGET POINT UP TO 0.6mm DISPLACEMENT
TOLERANCE DIVERGENCE
CENTER WITHIN 0.15mm PER 50mm

STRAIGHT NESS | ROUND NESS | PARALLEL ISM | POSIT ION | DIMENTI ONAL

FLATNESS | CYLINDRICAL NESS | PERPENDICULARITY | CONCENTRICITY | CIRCULAR RUNOUT

NOTE				HEAT TREATMENT		MODEL CB12	
3RD ANGLE PROJECTION			SS	MATERIAL		DRAWING No.	
APPROVED	CHECKED	DESIGNER		QUANTITY	SCALE 1:1	PART NAME	
FUJI MACHINE MFG.CO.,LTD. 富士機械製造株式会社			A1		DATE	TITLE Ball-Lok Chuck	
						USER	